The ‘Merf clamp’

An individual axis locking, toolbar clamp, for weeding machinery and other uses.

April 2022

Table of contents

1. Open Hardware Licence

See section 8 page 16 for more information and the licence.

2. Overview and aims

Mechanical weeding is becoming ever more important due to challenges to herbicides, such as evolved resistance and legislative prohibitions. One of the main alternatives to herbicides are mechanical weeders, such as interrow hoes.

Many mechanical weeders have weeding tools, such as hoe blades, attached to a toolbar by a clamp. There have been many clamp designs made over many years, but from the perspective of the end user they all suffer from a number of deficiencies.

The main problem on many clamps is that a single bolt locks both the horizontal adjustment of the clamp along the toolbar, and the vertical adjustment of the tool leg. While simple in design and engineering, it means that when only one axis needs adjusting both axes are loosened and the axis that does not need adjustment can move and lose its position, making them difficult to position accurately. While more complex, it is better for each axis to have its own individual locking system.

A few clamps need to be slid onto the end of the toolbar, which is problematic if there are already other tools mounted on the bar that are in the way. Ideally a clamp should be able to be directly slid onto the toolbar in the exact location it is required.

Similarly many clamps require the tool leg to be slid up through the clamp. This may require the machinery to be lifted up to allow the tool leg to be slid into the clamp, or other inconveniences.

A lot of clamps use a locking system where the end of a bolt or set screw pushes against part of the tool leg and / or toolbar. This can result in the end of the bolt or set screw becoming damaged, such that it cannot be taken out of the clamp. Likewise the area on the toolbar and tool leg where the bolt impinges can be damaged, making it difficult to move along the toolbar and move the tool leg inside the clamp.

To address these limitations a new design of toolbar clamp has been invented. The overall design aims of the clamp are:

- Each axis has its own individual locking system;
- The clamp can be placed directly on the toolbar, not slid on from the ends;
- Likewise, the tool leg can placed into the clamp, rather than having to be slid in from the end;
- Locking the tool leg and toolbar in the clamp is done by squeezing the clamp rather than driving the end of the bolt into the tool leg or toolbar, thus avoiding damage to toolbar, tool leg and bolts;
- That the clamp can be easily removed from the toolbar with the tool leg held in position, so the tool can be quickly and easily moved to another location on the toolbar without needing to readjust the tool leg;
- Be as lightweight as possible, achieving strength through design, rather than thickness of steel;
- Be simple to construct:
  - The basic version only needs a saw, a drill and a welder to construct from flat mild steel bar;
  - Where profile cutting is available, the more complex shaped parts lock together like a jigsaw to ensure accurate dimensions, easy construction and extra strength;
  - No bending is required, as this typically requires specialist machinery.

- Be easy to use - only one spanner is required, bolt heads are prevented from rotating by a 'locking bar' which still allows a crescent spanner to be used on the head if extra leverage is needed (e.g. a seized nut);
- Have no loose parts that can be lost;
- Does not have any bolt threads in the body of the clamp that can get damaged, rust up etc.;
- Bolts and nuts for clamping are easily removed (even cut off) and replaced if damaged;
- Overall the clamp complies with the KISS principle en.wikipedia.org/wiki/KISS_principle.

The drawings below are for 50 × 50 mm box toolbar and 10 × 30 mm tool leg, however, the aim is that the design can be adapted for a wide range of toolbar and tool leg sizes.

A design for clamping round tool legs is also provided.

As per the Open Hardware Licence the objective is for others to translate this design to other sizes and shapes of toolbar and tool legs, both as a Word document and ideally as CAD files, so as many people as possible can make and use the clamps.

The Open Hardware Licence allows for commercial production and sale of the clamps, but any modification and adaptation of the design must also remain open-source under the TAPR Open Hardware Licence .

3. General design notes

- The clamp is designed for square and rectangular not diamond toolbars.
- The clamp is designed for where the tool leg and toolbar are at right angles to each other (the long side of the tool leg is at 90° to the long side of the toolbar).
- Having the plates that hold the tool leg and toolbar at 90° to each other creates strength through design rather than thick (e.g. 10 mm) steel.
- M12 bolts with international 19 mm heads and nuts are used in the drawings. If M12 bolts with 18 mm heads and nuts (as used in New Zealand and Australia) are used adjust the plans accordingly. M12 bolts with 19 mm heads and nuts are the same size as imperial half inch bolts.
- Flange nuts are used to spread load and reduce unwinding due to vibrations. Regular nuts and washers can be used as well.
- The toolbar side of the clamp has only one bolt hole, as the size of the toolbar prevents the clamp from easily twisting. If twisting is a problem change it to two bolt holes at either end of the clamp.
- The tool leg side of the clamp has three bolt holes. Either only the central hole is used if that is sufficient to hold the tool leg in place, or the top and bottom holes are both used to ensure the tool leg cannot move (see photos).

4. Construction notes

It is assumed that the person(s) building the clamps has a reasonable level of understanding of metal fabrication, e.g., how to weld the pieces together without the long runs of weld on one side of a T joint, pulling the welded piece out of alignment due to contracting on cooling.

The plans below are for 50 × 50 mm box toolbar and 10 × 30 mm tool leg. Sizes will need to be changed for different sized toolbars and tool legs.

5. Plans for clamp built from profile cut steel

These plans use a mixture of 6 mm and 4 mm thick steel. From the experience of building the clamp made from flat bar, 4 mm thick steel could be used for all the components of this profile cut design.

All measurements on all plans are in millimetres (mm).

5.1. Side view, 1:1 scale

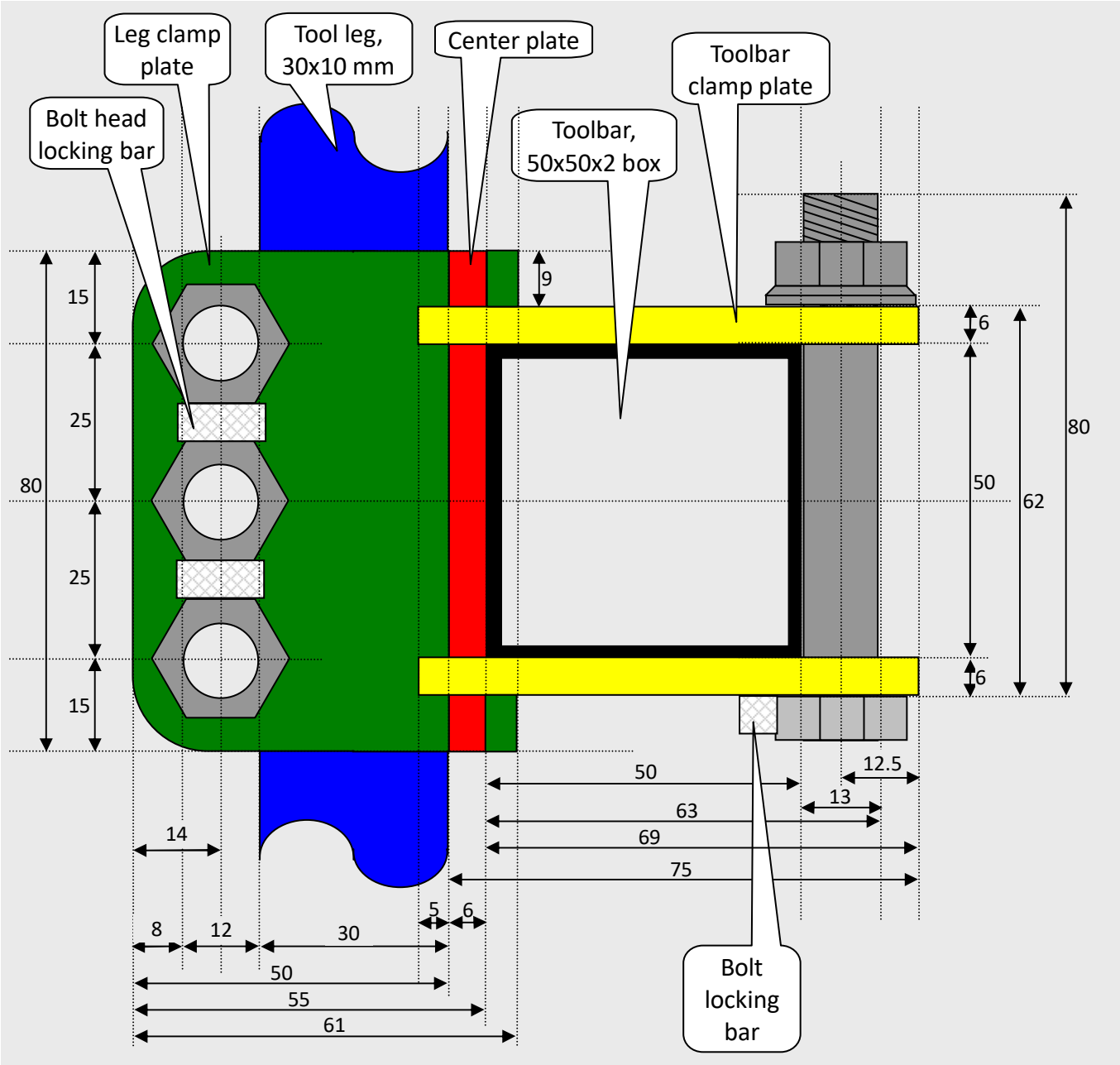

5.2. Plan view, 1:1 scale

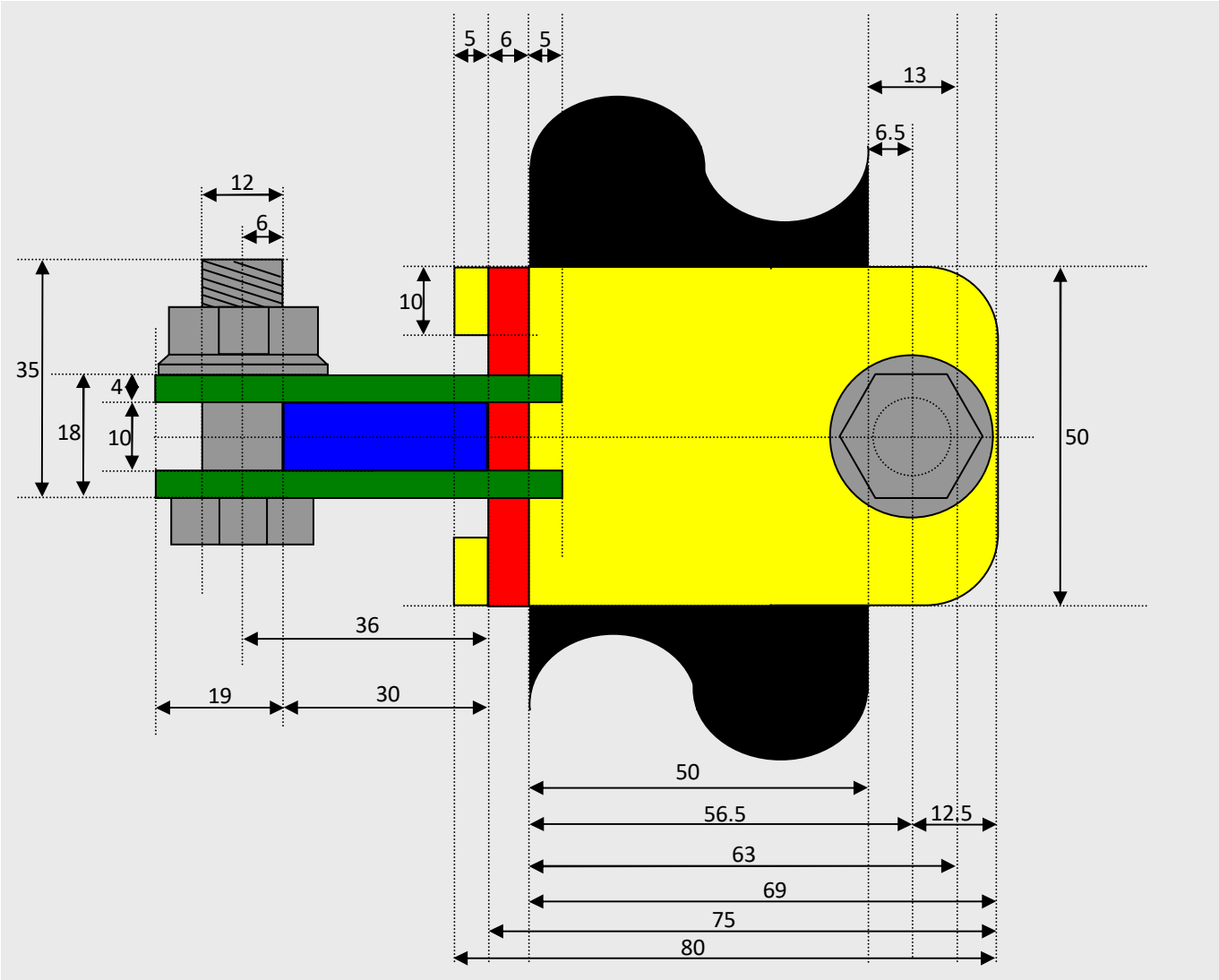

5.3. Profile cutting shapes

These profile cut templates are designed to snugly interlock (like a jigsaw) to facilitate production by ensuring the pieces are accurately placed, and to facilitate welding, especially where long runs of weld on one side of the tool leg plate and toolbar clamp plates could cause the plates to be pulled away from 90° by allowing welding first of the tangs / opposite side of the main weld .

It has also been assumed that the tool leg will be profile cut so that its width is accurate, and also the plate from which it is cut tends to have better thickness tolerances than flat bar. It has been assumed that the 50 mm box will have some variation in size, thus the use of a 13 mm hole for the 12 mm bolt to allow for the box to vary between 49.5 and 50.5 mm and still have the bolt tight against the box when tightened.

5.3.1. Main centre plate, profile cutting pattern, 1:1 scale

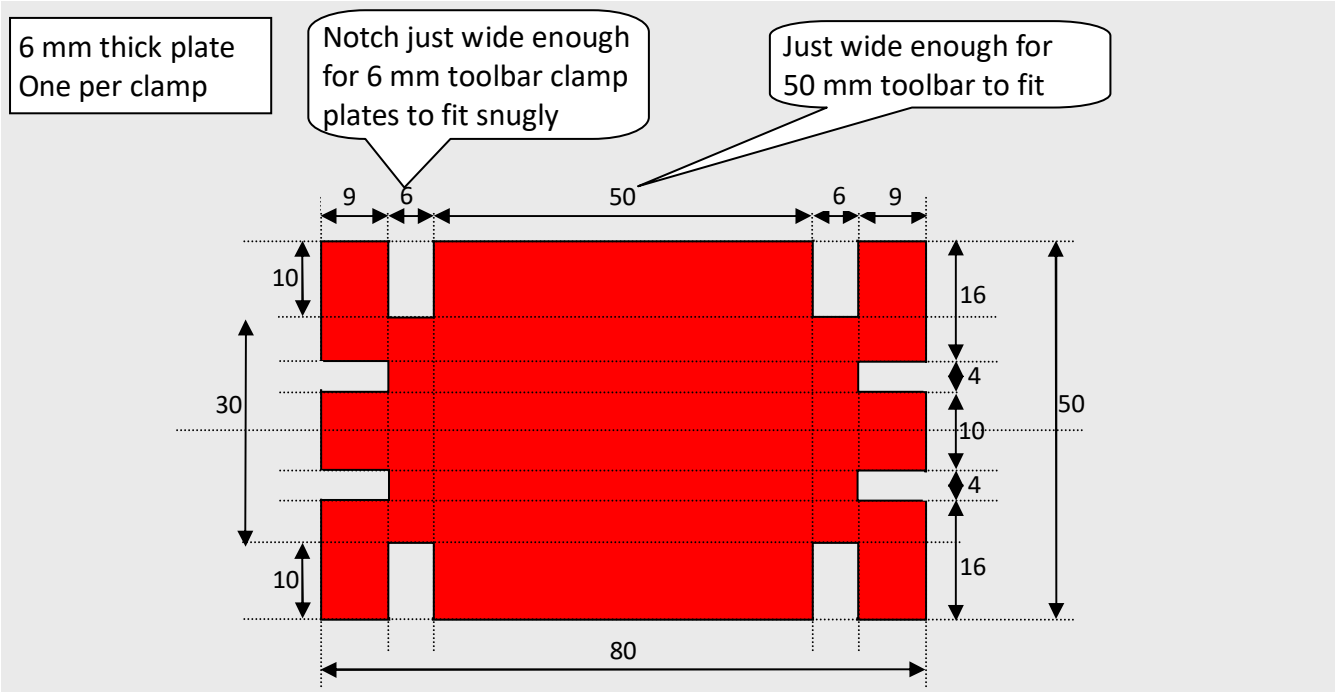

5.3.2. Toolbar clamp plates, profile cutting pattern, 1:1 scale

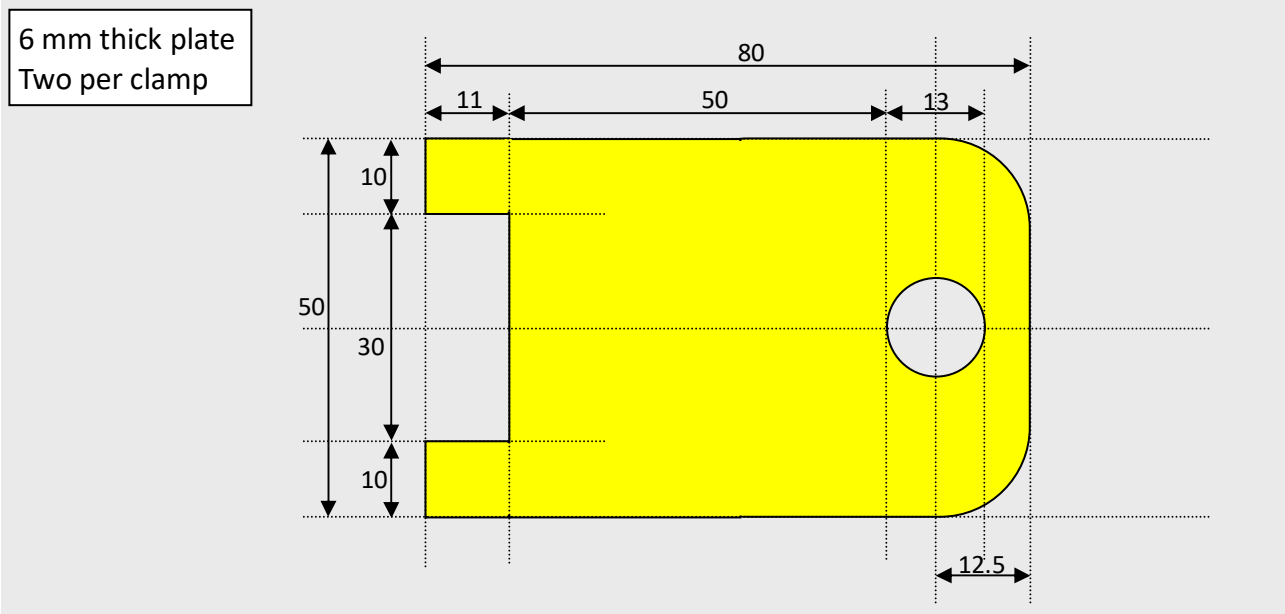

5.3.3. Tool leg clamp plates, profile cutting pattern, 1:1 scale

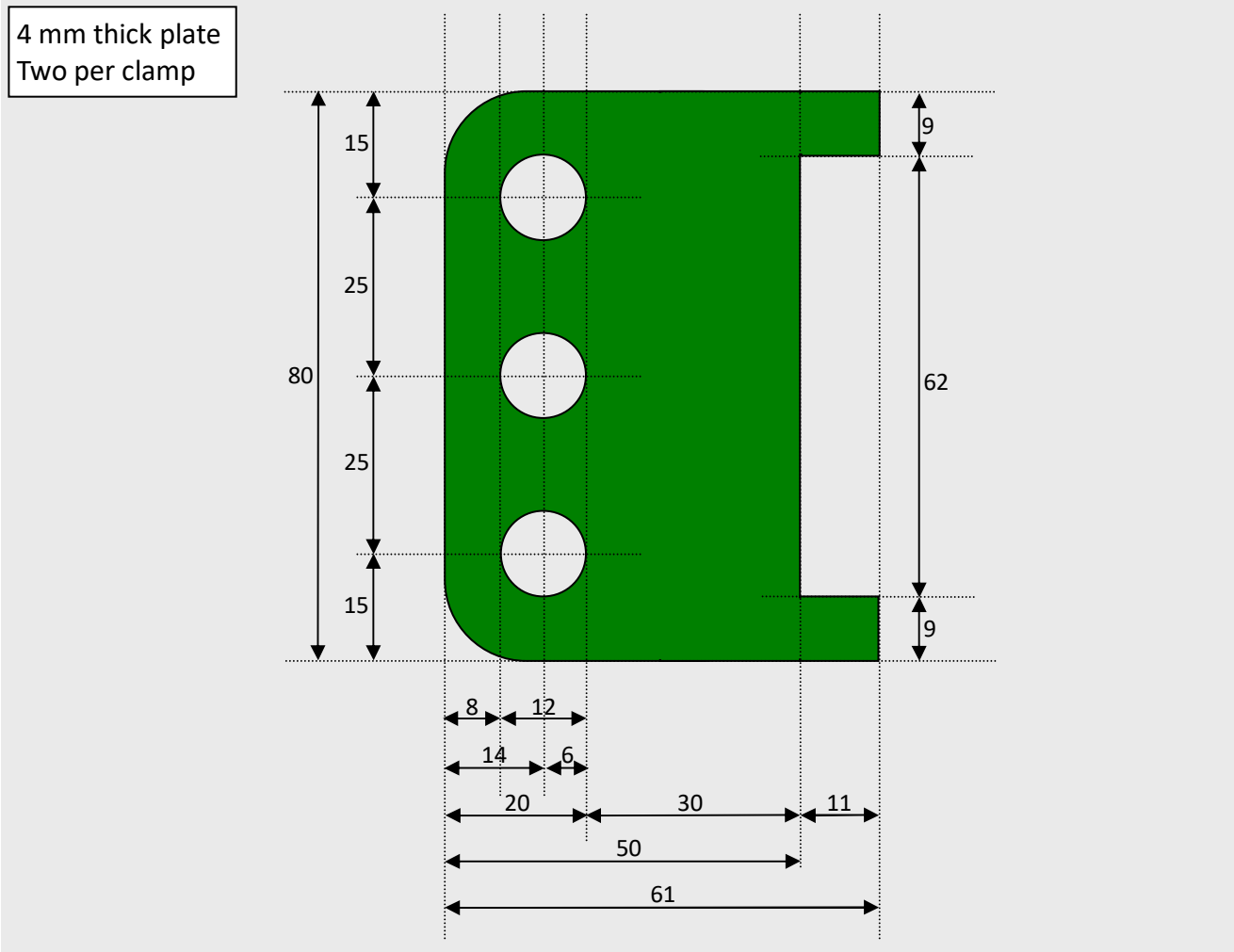

Three holes are provided in the tool leg clamp plate to give users the options of using a single bolt in the central hole, or two bolts in the lower and upper holes to lock the tool leg in place, to accommodate different levels of force on the tool leg.

5.3.4. Bolt locking bar

6 mm thick plate
Three per clamp

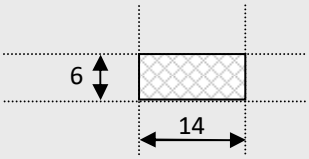

5.4. Component ordering list - per clamp

- Profile cut steel plate as per above drawings;
- One M12 bolt 80 mm long with flange nut;
- One or two 35 mm bolts with flange nut(s).

5.5. Photos

The tool leg bolts are 40 mm, 35 mm is preferred.

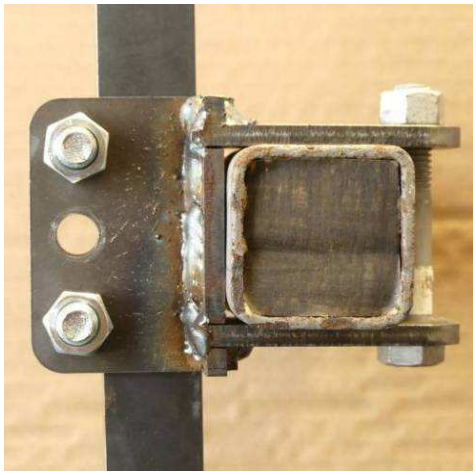

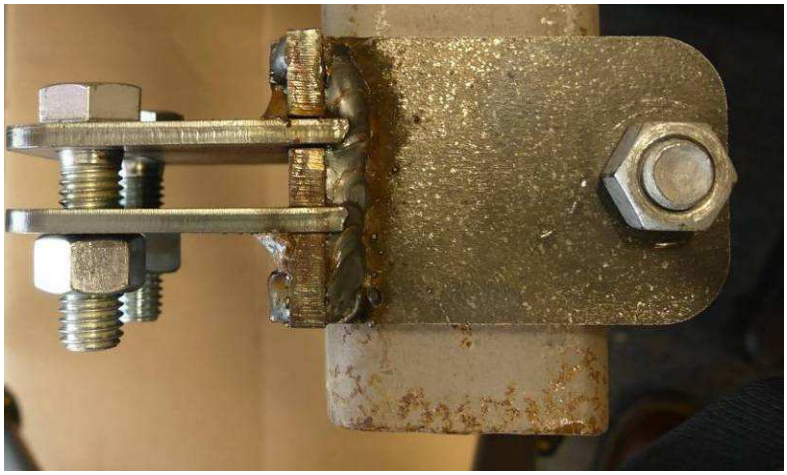

6. Plans for clamp built from mild steel flat bar

The aim of this set of plans is to allow the production of the clamps using standard sized flat steel bars, with the minimum equipment, namely some form of saw (hacksaw, angle grinder), a drill, and a welder. Without the interlocking sections, accurate production will require the use of jigs to ensure components are correctly aligned. Also flat bar has lower thickness tolerances than plate, so this may require the clamp dimensions to be fractionally increased to compensate, or the tool legs and toolbar may need to be ground down (using an angle grinder) where there are high spots.

All measurements on all plans are in millimetres (mm).

6.1. Side view, 1:1 scale

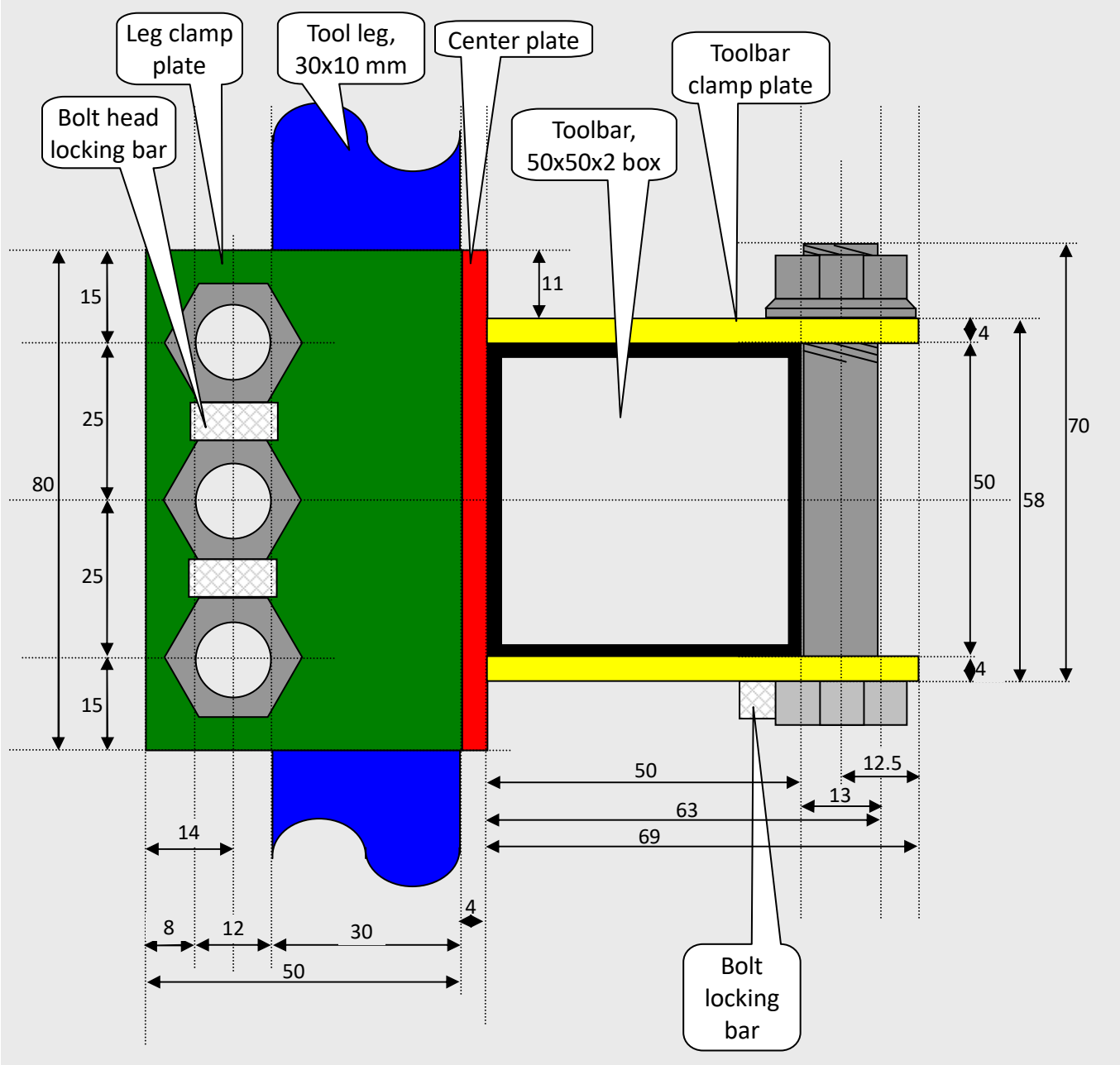

6.2. Plan view, 1:1 scale

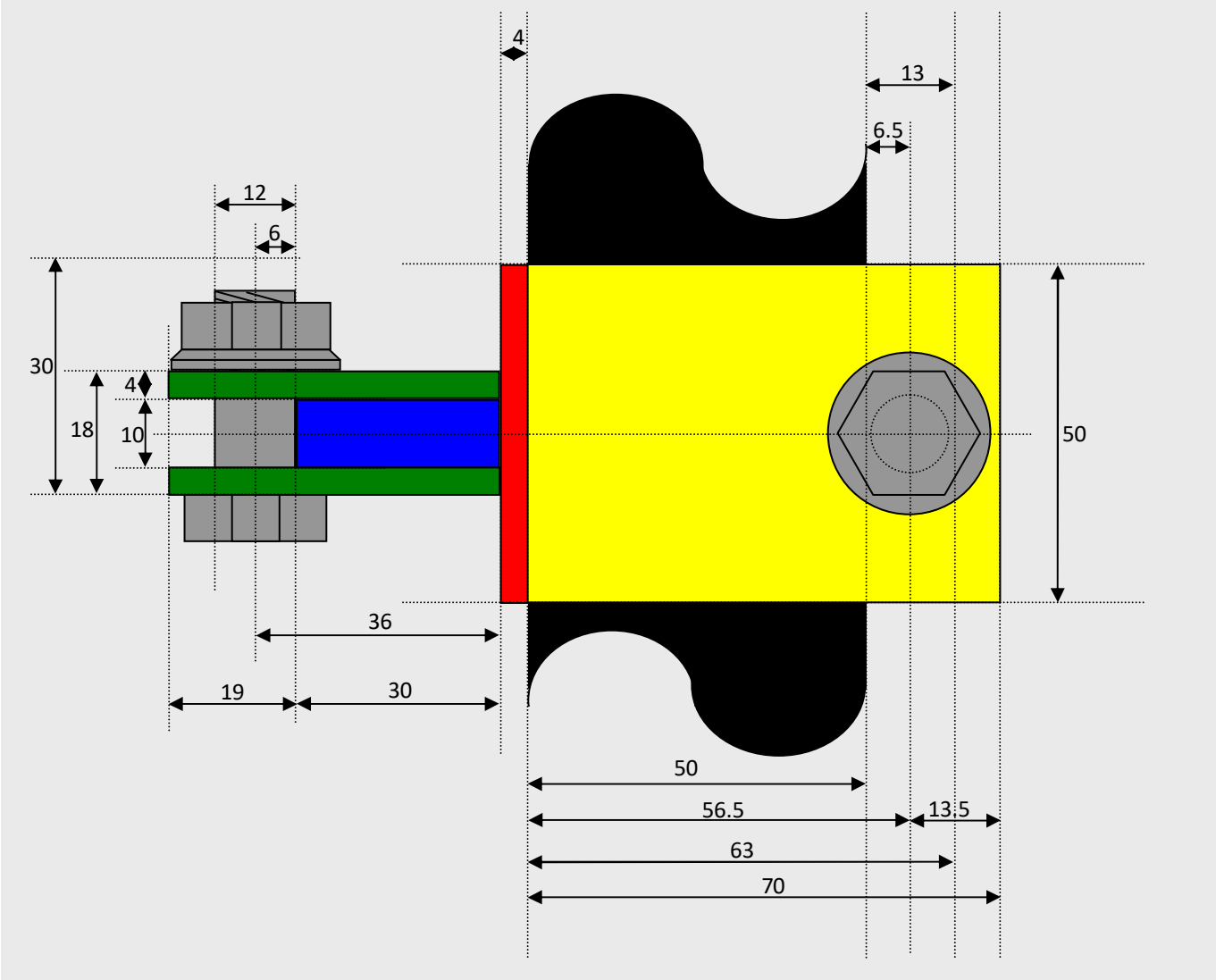

6.3. Component parts

6.3.1. Main centre plate, 1:1 scale

50 × 4 flat bar cut into 80 mm lengths. One piece per clamp.

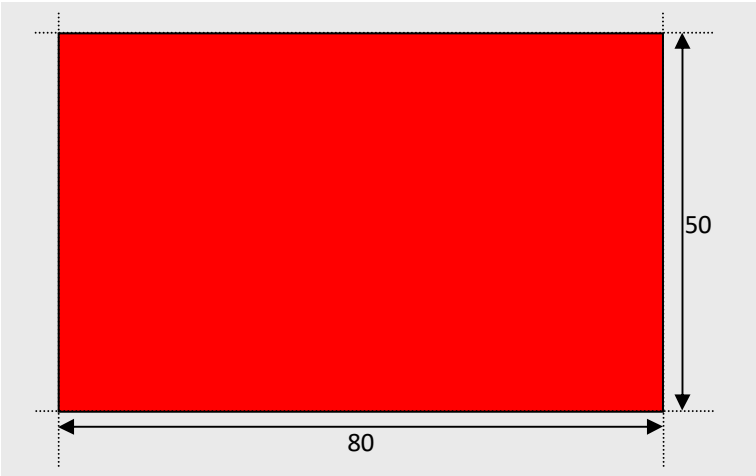

6.3.2. Toolbar clamp plates, 1:1 scale

50 × 4 flat bar cut into 70 mm lengths with one drilled 13 mm hole. Two pieces per clamp.

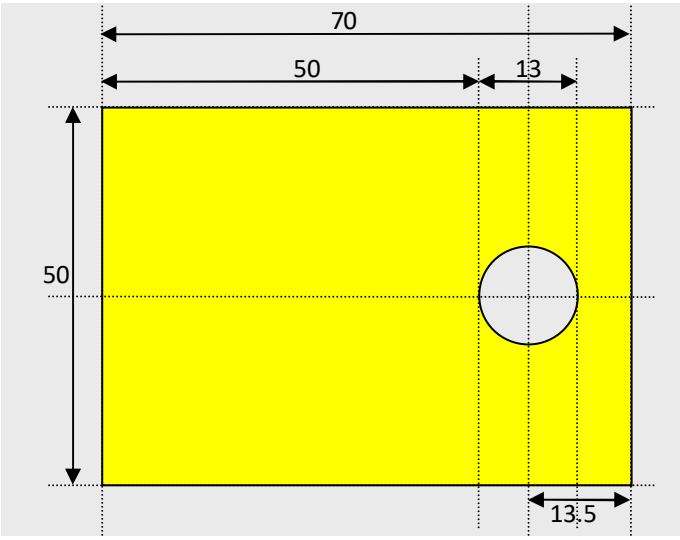

6.3.3. Tool leg clamp plates, 1:1 scale

50 x 4 flat bar cut into 80 mm lengths with three 12 mm drilled holes. Two pieces per clamp.

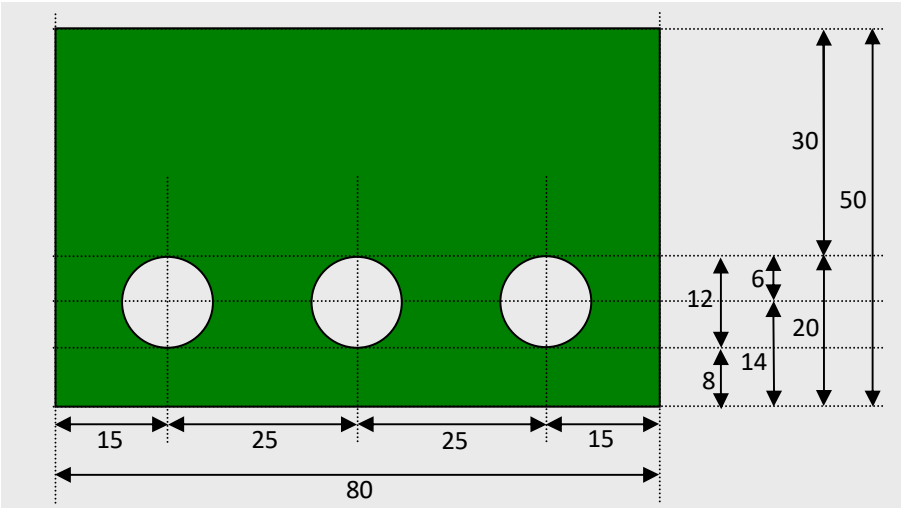

Three holes are provided in the tool leg clamp plate to give users the options of using a single bolt in the central hole, or two bolts in the lower and upper holes to lock the tool leg in place, to accommodate different levels of force on the tool leg.

6.3.4. Bolt locking bar

6 mm square bar cut into 14 mm lengths. Three per clamp

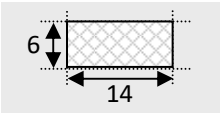

6.4. Component ordering list - per clamp

- 50 × 4 flat bar 400 mm incl. 20 mm cutting waste;
- 6 × 6 square bar, 45 mm incl. 3 mm cutting waste;
- One M12 bolt 70 mm long with flange nut;
- One or two 30 mm bolts with flange nut(s).

6.5. Photos

The tool leg bolts are 40 mm, 35 mm is preferred. Apologies for the quality of the welding, I was a bit out of practice!

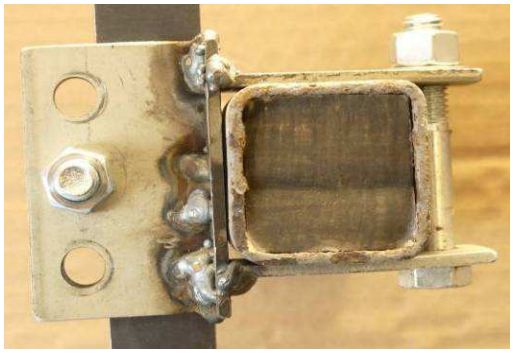

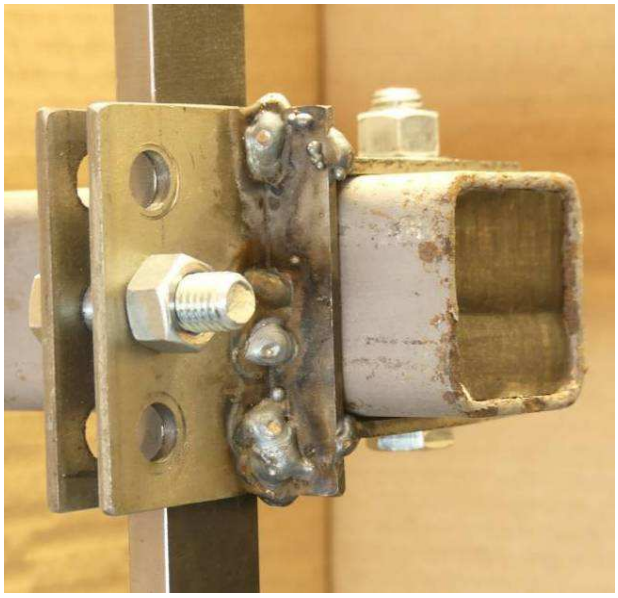

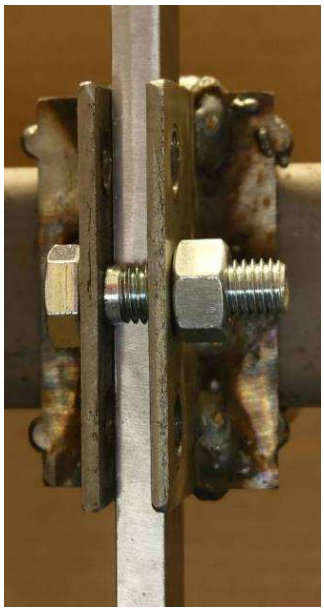
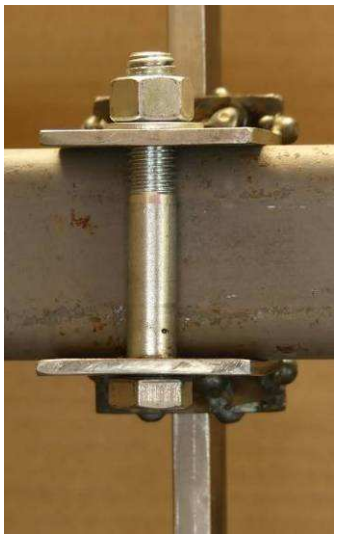
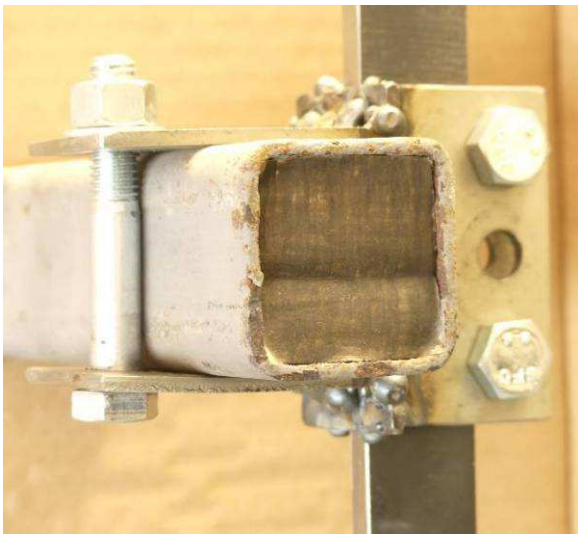


7. Round tool leg clamp

For round tool legs the following is the best way of clamping them.

- Take a piece of round pipe that the internal diameter is the same as the outside diameter of the round tool leg. The pipe needs to have a wall thickness of around 3 mm - 1/5” (0.2”). Thicker is not better.
- Cut the pipe to length – generally the same length as the back of the ‘Merf clamp’.
- Cut a slot down the length of the pipe about 5 mm / ¼” wide. If there is an internal seam in the pipe make sure you cut down the seam to eliminate it, else you will have to file it out.
- Get a M12 bolt, 40 mm long or ½” bolt 1 ½” long with two nuts and one wide washer, i.e., wider than the bolt head.
- Drill one nut out so the bolt can just slide through it but so it is not loose.
- Weld the nuts on either side of the cut slot, half way along the pipe, so that the bolt can pull the two sides of the pipe together. Put the bolt in the nuts for welding so they are lined up correctly.
- Weld the pipe to the back of the part of the ‘Merf clamp’ that attaches to the toolbar

This approach is far superior to the common approach of drilling a hole in the pipe, welding a nut over the hole and having the bolt screw into the side of the round tool leg. This design has far higher clamping / gripping power on the leg and it wont damage the leg. The main limitation is the tool leg has to be slid into the end of the clamp.

If extreme clamping power is needed use two bolts 1/3 and 2/3 of the way along the pipe.

7.1. Plan view, 1:1 scale

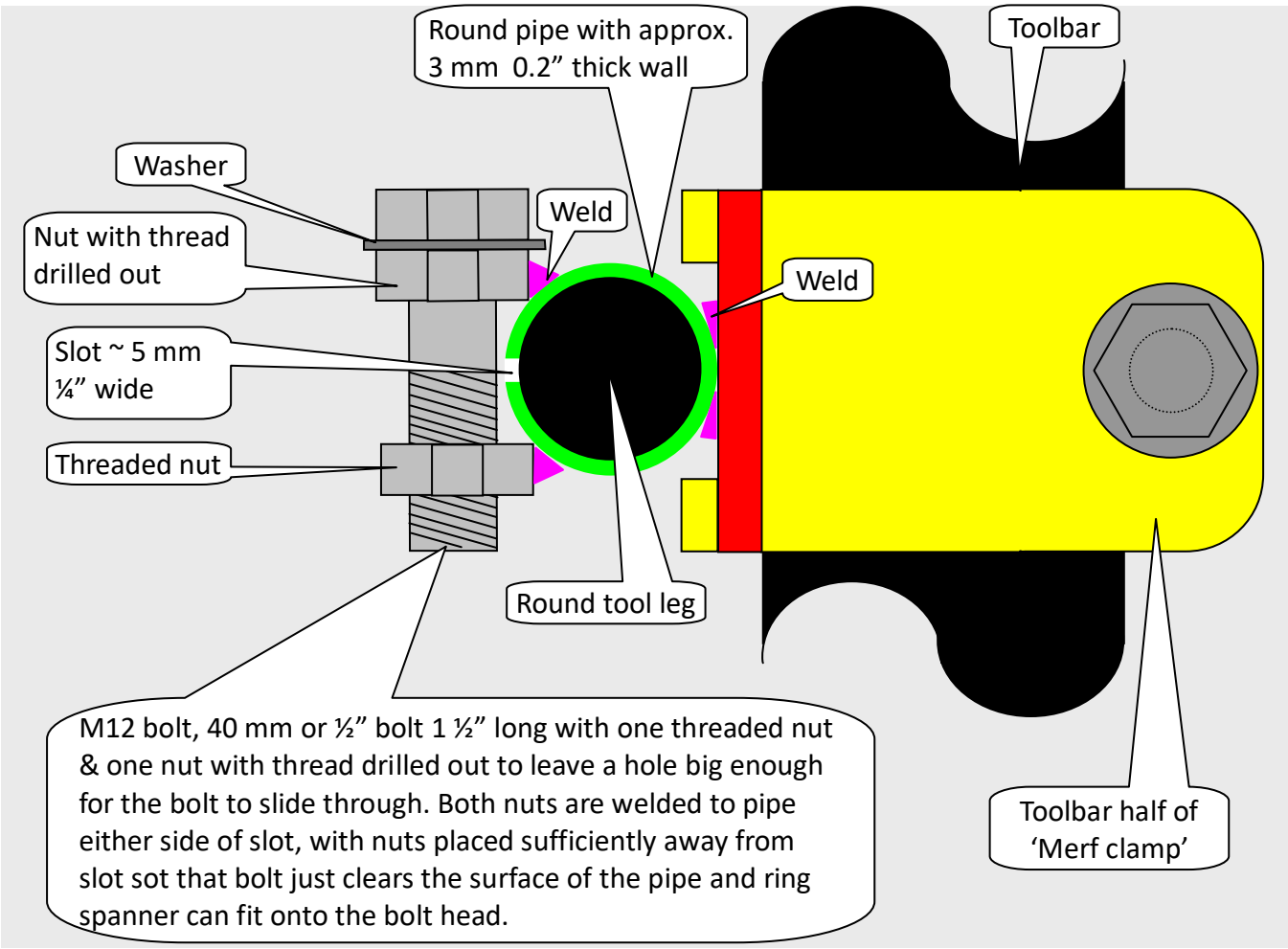

7.2. Side view, 1:1 scale

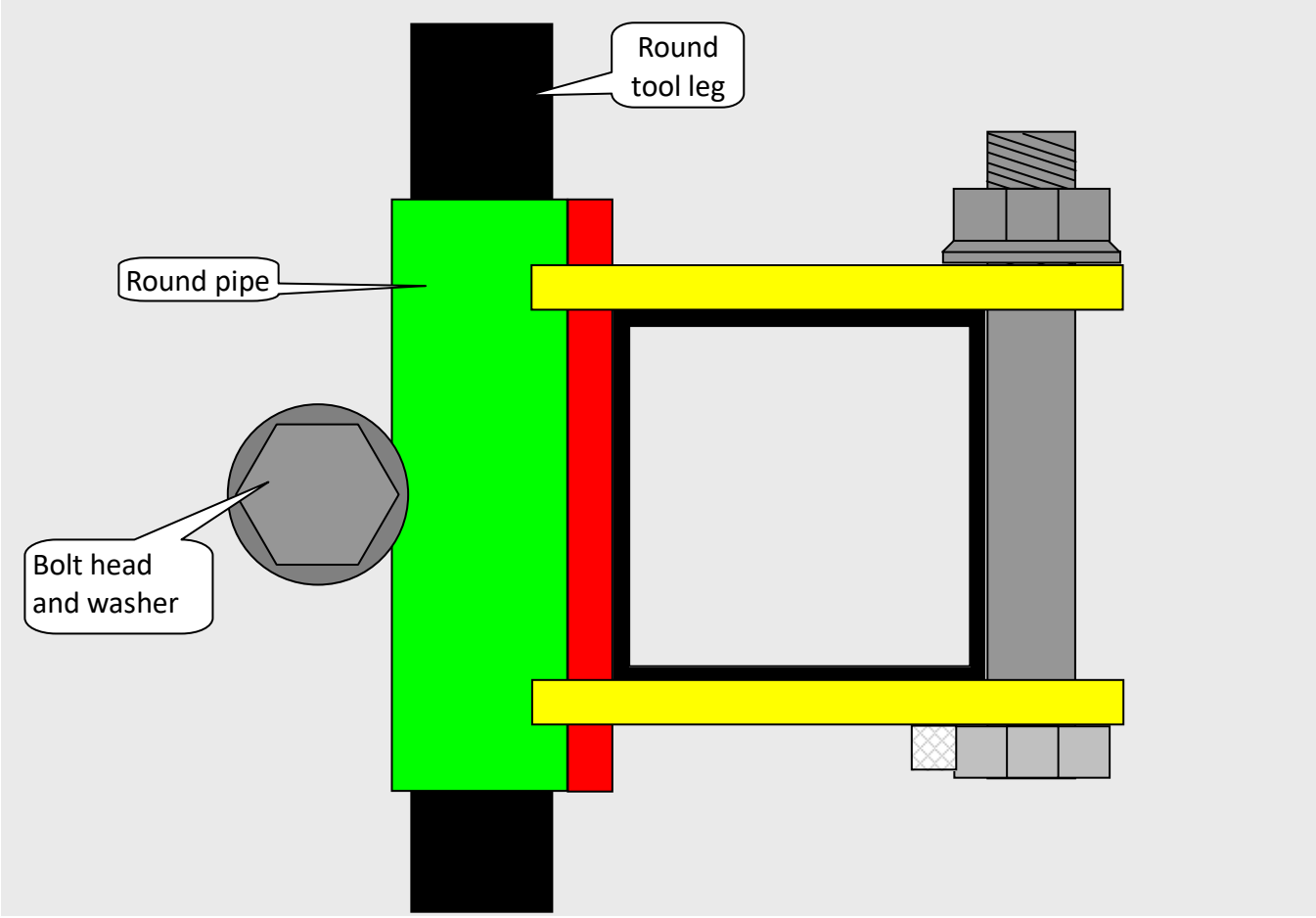

7.3. Photos

These photos show the round clamp that supports the 1.2 meter – 4’ long handles on a 4 Wheel Hoe.

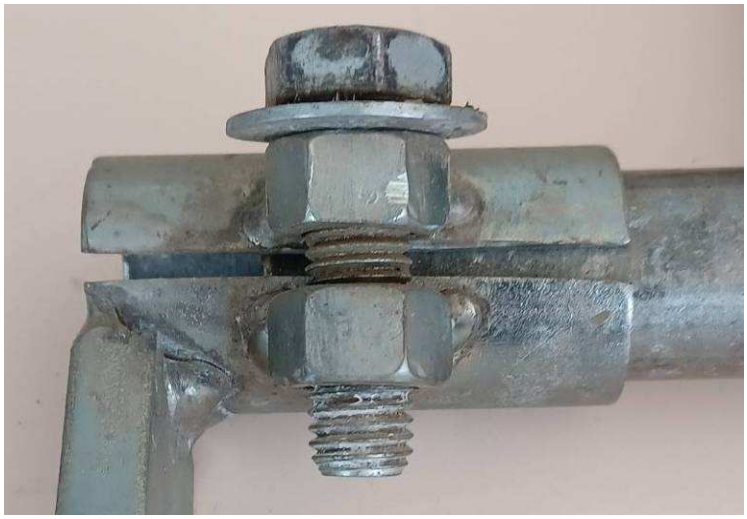

8. Open Hardware License

The TAPR Open Hardware License

Version 1.0 (May 25, 2007)

PREAMBLE

Open Hardware is a thing – a physical artifact, either electrical or mechanical – whose design information is available to, and usable by, the public in a way that allows anyone to make, modify, distribute, and use that thing. In this preface, design information is called "documentation" and things created from it are called "products."

The TAPR Open Hardware License ("OHL") agreement provides a legal framework for Open Hardware projects. It may be used for any kind of product, be it a hammer or a computer motherboard, and is TAPR's contribution to the community; anyone may use the OHL for their Open Hardware project. You are free to copy and use this document provided only that you do not change it.

Like the GNU General Public License, the OHL is designed to guarantee your freedom to share and to create. It forbids anyone who receives rights under the OHL to deny any other licensee those same rights to copy, modify, and distribute documentation, and to make, use and distribute products based on that documentation.

Unlike the GPL, the OHL is not primarily a copyright license. While copyright protects documentation from unauthorized copying, modification, and distribution, it has little to do with your right to make, distribute, or use a product based on that documentation. For better or worse, patents play a significant role in those activities. Although it does not prohibit anyone from patenting inventions embodied in an Open Hardware design, and of course cannot prevent a third party from enforcing their patent rights, those who benefit from an OHL design may not bring lawsuits claiming that design infringes their patents or other intellectual property.

The OHL addresses unique issues involved in the creation of tangible, physical things, but does not cover software, firmware, or code loaded into programmable devices. A copyright-oriented license such as the GPL better suits these creations.

How can you use the OHL, or a design based upon it? While the terms and conditions below take precedence over this preamble, here is a summary:

- You may modify the documentation and make products based upon it.
- You may use products for any legal purpose without limitation.
- You may distribute unmodified documentation, but you must include the complete package as you received it.
- You may distribute products you make to third parties, if you either include the documentation on which the product is based, or make it available without charge for at least three years to anyone who requests it.
- You may distribute modified documentation or products based on it, if you:
- License your modifications under the OHL.
- Include those modifications, following the requirements stated below.
- Attempt to send the modified documentation by email to any of the developers who have provided their email address. This is a good faith obligation – if the email fails, you need do nothing more and may go on with your distribution.

- If you create a design that you want to license under the OHL, you should:
- Include this document in a file named LICENSE (with the appropriate extension) that is included in the documentation package.
- If the file format allows, include a notice like "Licensed under the TAPR Open Hardware License (www.tapr.org/OHL)" in each documentation file. While not required, you should also include this notice on printed circuit board artwork and the product itself; if space is limited the notice can be shortened or abbreviated.
- Include a copyright notice in each file and on printed circuit board artwork.
- If you wish to be notified of modifications that others may make, include your email address in a file named "CONTRIB.TXT" or something similar.
- Any time the OHL requires you to make documentation available to others, you must include all the materials you received from the upstream licensors. In addition, if you have modified the documentation:
- You must identify the modifications in a text file (preferably named "CHANGES.TXT") that you include with the documentation. That file must also include a statement like "These modifications are licensed under the TAPR Open Hardware License."
- You must include any new files you created, including any manufacturing files (such as Gerber files) you create in the course of making products.
- You must include both "before" and "after" versions of all files you modified.
- You may include files in proprietary formats, but you must also include open format versions (such as Gerber, ASCII, Postscript, or PDF) if your tools can create them.

TERMS AND CONDITIONS

1. Introduction

1.1 This Agreement governs how you may use, copy, modify, and distribute Documentation, and how you may make, have made, and distribute Products based on that Documentation. As used in this Agreement, to "distribute" Documentation means to directly or indirectly make copies available to a third party, and to "distribute" Products means to directly or indirectly give, loan, sell or otherwise transfer them to a third party.

1.2 "Documentation" includes:

(a) schematic diagrams;

(b) circuit or circuit board layouts, including Gerber and other data files used for manufacture;

(c) mechanical drawings, including CAD, CAM, and other data files used for manufacture;

(d) flow charts and descriptive text; and

(e) other explanatory material.

Documentation may be in any tangible or intangible form of expression, including but not limited to computer files in open or proprietary formats and representations on paper, film, or other media.

1.3 "Products" include:

(a) circuit boards, mechanical assemblies, and other physical parts and components;

(b) assembled or partially assembled units (including components and subassemblies); and

(c) parts and components combined into kits intended for assembly by others;

which are based in whole or in part on the Documentation.

1.4 This Agreement applies to any Documentation which contains a notice stating it is subject to the TAPR Open Hardware License, and to all Products based in whole or in part on that Documentation. If Documentation is distributed in an archive (such as a "zip" file) which includes this document, all files in that archive are subject to this Agreement unless they are specifically excluded. Each person who contributes content to the Documentation is referred to in this Agreement as a "Licensor."

1.5 By (a) using, copying, modifying, or distributing the Documentation, or (b) making or having Products made or distributing them, you accept this Agreement, agree to comply with its terms, and become a "Licensee." Any activity inconsistent with this Agreement will automatically terminate your rights under it (including the immunities from suit granted in Section 2), but the rights of others who have received Documentation, or have obtained Products, directly or indirectly from you will not be affected so long as they fully comply with it themselves.

1.6 This Agreement does not apply to software, firmware, or code loaded into programmable devices which may be used in conjunction with Documentation or Products. Such software is subject to the license terms established by its copyright holder(s).

2. Patents

2.1 Each Licensor grants you, every other Licensee, and every possessor or user of Products a perpetual, worldwide, and royalty-free immunity from suit under any patent, patent application, or other intellectual property right which he or she controls, to the extent necessary to make, have made, possess, use, and distribute Products. This immunity does not extend to infringement arising from modifications subsequently made by others.

2.2 If you make or have Products made, or distribute Documentation that you have modified, you grant every Licensor, every other Licensee, and every possessor or user of Products a perpetual, worldwide, and royalty-free immunity from suit under any patent, patent application, or other intellectual property right which you control, to the extent necessary to make, have made, possess, use, and distribute Products. This immunity does not extend to infringement arising from modifications subsequently made by others.

2.3 To avoid doubt, providing Documentation to a third party for the sole purpose of having that party make Products on your behalf is not considered "distribution," and a third party's act of making Products solely on your behalf does not cause that party to grant the immunity described in the preceding paragraph.

2.4 These grants of immunity are a material part of this Agreement, and form a portion of the consideration given by each party to the other. If any court judgment or legal agreement prevents you from granting the immunity required by this Section, your rights under this Agreement will terminate and you may no longer use, copy, modify or distribute the Documentation, or make, have made, or distribute Products.

3. Modifications

You may modify the Documentation, and those modifications will become part of the Documentation. They are subject to this Agreement, as are Products based in whole or in part on them. If you distribute the modified Documentation, or Products based in whole or in part upon it, you must email the modified Documentation in a form compliant with Section 4 to each Licensor who has provided an email address with the Documentation. Attempting to send the email completes your obligations under this Section and you need take no further action if any address fails.

4. Distributing Documentation

4.1 You may distribute unmodified copies of the Documentation in its entirety in any medium, provided that you retain all copyright and other notices (including references to this Agreement) included by each Licensor, and include an unaltered copy of this Agreement.

4.2 You may distribute modified copies of the Documentation if you comply with all the requirements of the preceding paragraph and:

> (a) include a prominent notice in an ASCII or other open format file identifying those elements of the Documentation that you changed, and stating that the modifications are licensed under the terms of this Agreement;
>
> (b) include all new documentation files that you create, as well as both the original and modified versions of each file you change (files may be in your development tool's native file format, but if reasonably possible, you must also include open format, such as Gerber, ASCII, Postscript, or PDF, versions);
>
> (c) do not change the terms of this Agreement with respect to subsequent licensees; and
>
> (d) if you make or have Products made, include in the Documentation all elements reasonably required to permit others to make Products, including Gerber, CAD/CAM and other files used for manufacture.

5. Making Products

5.1 You may use the Documentation to make or have Products made, provided that each Product retains any notices included by the Licensor (including, but not limited to, copyright notices on circuit boards).

5.2 You may distribute Products you make or have made, provided that you include with each unit a copy of the Documentation in a form consistent with Section 4. Alternatively, you may include either (i) an offer valid for at least three years to provide that Documentation, at no charge other than the reasonable cost of media and postage, to any person who requests it; or (ii) a URL where that Documentation may be downloaded, available for at least three years after you last distribute the Product.

6. NEW LICENSE VERSIONS

TAPR may publish updated versions of the OHL which retain the same general provisions as the present version, but differ in detail to address new problems or concerns, and carry a distinguishing version number. If the Documentation specifies a version number which applies to it and "any later version", you may choose either that version or any later version published by TAPR. If the Documentation does not specify a version number, you may choose any version ever published by TAPR. TAPR owns the copyright to the OHL, but grants permission to any person to copy, distribute, and use it in unmodified form.

7. WARRANTY AND LIABILITY LIMITATIONS

7.1 THE DOCUMENTATION IS PROVIDED ON AN "AS-IS" BASIS WITHOUT WARRANTY OF ANY KIND, TO THE EXTENT PERMITTED BY APPLICABLE LAW. ALL WARRANTIES, EXPRESS OR IMPLIED, INCLUDING BUT NOT LIMITED TO ANY WARRANTIES OF MERCHANTABILITY, FITNESS FOR A PARTICULAR PURPOSE, AND TITLE, ARE HEREBY EXPRESSLY DISCLAIMED.

7.2 IN NO EVENT UNLESS REQUIRED BY APPLICABLE LAW WILL ANY LICENSOR BE LIABLE TO YOU OR ANY THIRD PARTY FOR ANY DIRECT, INDIRECT, INCIDENTAL, CONSEQUENTIAL, PUNITIVE, OR EXEMPLARY DAMAGES ARISING OUT OF THE USE OF, OR INABILITY TO USE, THE DOCUMENTATION OR PRODUCTS, INCLUDING BUT NOT LIMITED TO CLAIMS OF INTELLECTUAL PROPERTY INFRINGEMENT OR LOSS OF DATA, EVEN IF THAT PARTY HAS BEEN ADVISED OF THE POSSIBILITY OF SUCH DAMAGES.

7.3 You agree that the foregoing limitations are reasonable due to the non-financial nature of the transaction represented by this Agreement, and acknowledge that were it not for these limitations, the Licensor(s) would not be willing to make the Documentation available to you.

7.4 You agree to defend, indemnify, and hold each Licensor harmless from any claim brought by a third party alleging any defect in the design, manufacture, or operation of any Product which you make, have made, or distribute pursuant to this Agreement.

9. The MK1!